DXing.info Presents

Half Size Dual Active Delta Flag Arrays

Dallas Lankford, 12/31/2011, rev. 1/7/2012

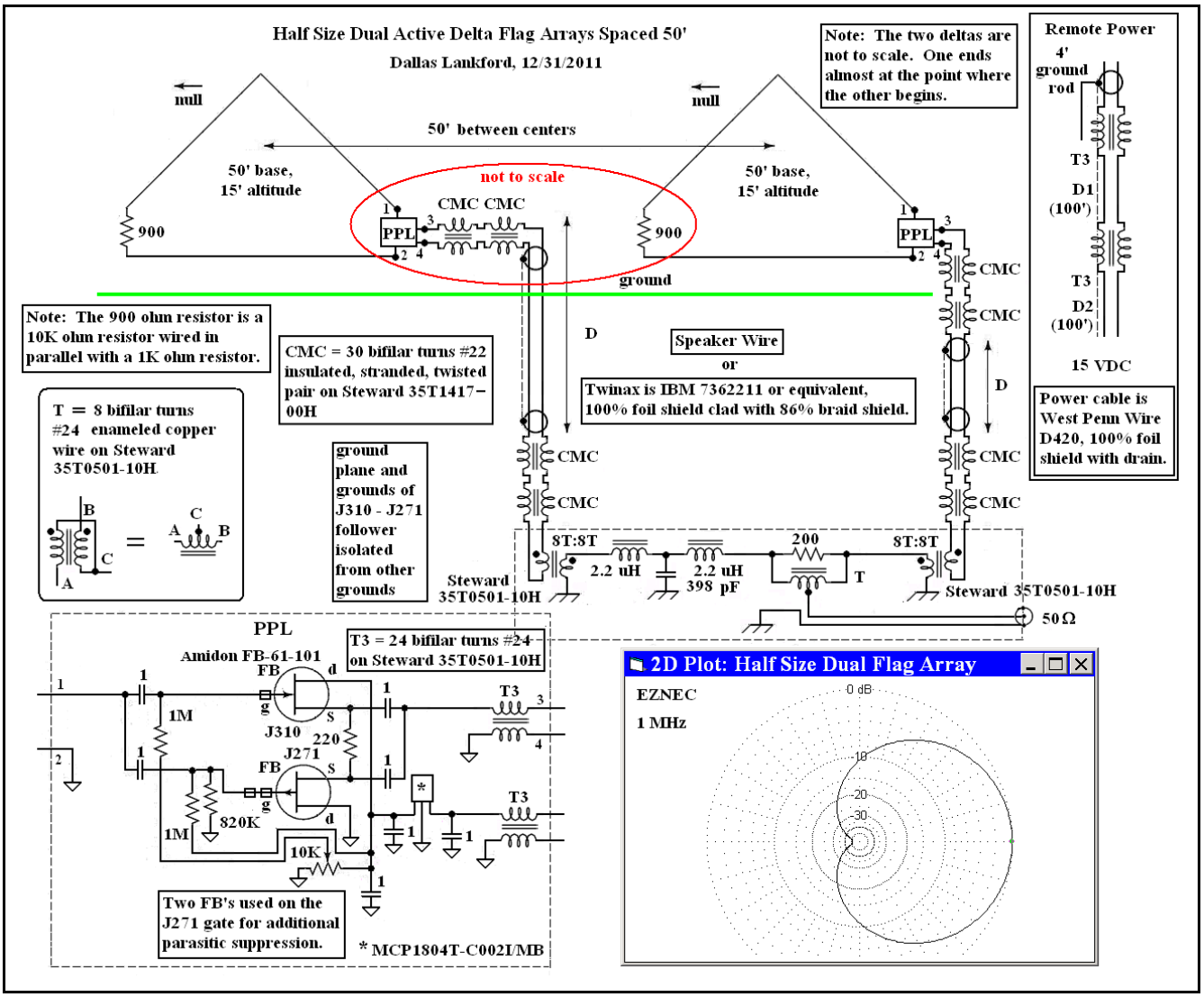

The half size active dual flag array described in the graphic above requires only 100' (30.5 meters) of linear space, and so it is an excellent choice for MW DXers with limited space for antennas. Although small compared to previous high performance MW antenna arrays, it is a state of the art MW receiving antenna array, primarily because it uses true active delta flag antenna elements.

A true dual active flag or delta flag antenna array consists of active heads with high performance low noise FET followers. The signal output of the FET follower in the graphic above is only slightly less than the open source voltage output of the antenna elements. This means that there is no reduction in signal output compared to the tradition approach with step down transformers, and no additional 6 dB reduction in signal output due to impedance matching used by the traditional approach. Thus for flag arrays with 3:1 nominal voltage step down transformers, the increase in output voltage of the active design is about 16 dB. And because the noise voltage output of the FET follower is far below the thermal noise noise output of even a 1 dB noise figure preamplifier, the 16 dB gain of the active approach used here is effectively noise free. It is as if a 16 dB gain preamplifier with 0 dB noise figure has been used. The FET follower in the schematic above is not available as an off the shelf item, but a surface mount variant is currently under development by Jack Smith, K8ZOA of Clifton Laboratories, with a little support from me, and should soon be available as a commercial product.

The true active delta flag approach may be (probably is) necessary if you do not have enough space in your yard to build a full size dual delta flag array but want almost equal performance. This article shows you how to do it. Almost all the information you need is in the graphic at the beginning of this article.

The high performance FET follower is in the box labeled PPL (which is an abbreviation for "preamp per loop"). It is not really a preamp, and the antenna element is not really a loop, but never mind. Doug NX4D coined the term PPL, and I stole it from him.

For a dual array, two 100' length lead ins should be sufficient unless for some reason you want to put the dual array further away from your radio and preamps. The two lengths of lead in should also be equal lengths; otherwise the dual array will not work correctly. Let me repeat myself in case you missed or ignored it the first time: the lead ins of my dual array must be equal length in order for the dual array to work correctly.

The half size dual active delta flag array spaced 50' between centers became operational about 3 pm this afternoon, 12/31/2011. I did not begin to realize how good it is until about an hour later. I was sitting on 1120 kHz listening to man made noise, waiting for something to appear. I kept hearing low level "whoosh" "whoosh" "whoosh" … wondering what it was, I took my souped-up omnidirectional Sony 2010 outside and tuned to 1120 kHz. There was KMOX St. Louis in the clear. Sunset transition was starting early. Went back inside, still heard "whoosh" "whoosh" "whoosh" … from the R-390A connected to the half size dual active delta flag array. Thinking there was something wrong with the antenna or R-390A, I went outside and jumped the 900 ohm terminating resistors to "open up" the array (make the array null poorer, like a Wellbrook dual unterminated loop array). Went back inside and there was KMOX in the clear. Nothing wrong with either the antenna or R-390A. The "whoosh" "whoosh" "whoosh" … was just the half size DADFA doing its thing (the SAH of heavily nulled signals on 1120 kHz were modulating man made noise). Went back outside, unjumped the 900 ohm terminating resistors, and continued enjoying the exceptional nulling ability of the half size DADFA. It is by far and away the best half size dual (or half size quad) array that I have implemented to date. Now if I can just find two telescoping 15' masts which collapse to 3' and fit comfortably in a suitcase, I will have my next DXpedition antenna.

If you are wondering why I use an R-390A to test my antennas, it is because an R-390A is arguably the best analog receiver ever built and it does not introduce any noise from microprocessors, noise from a switching power supply, or noise from any other of the host of modern noise makers. It has accurately been said of the R-390A, "If you hear it, it is there."

The low dropout 12 volt regulator MCP1804T recommended by Jack Smith, K8ZOA of Clifton Laboratories is excellent, and adds no noise to the signal. Earlier I learned the hard way (at Quoddy Head 2011) that you have to thoroughly test LDO regulators because some of them add noise to the signal, beginning towards the low end of the MW band, and increasing as frequency decreases. An interesting feature of Jack's SMD FET follower variant of my J310-J271 circuit is a relay which grounds the input when power is not applied. This provides added protection against transient voltages when the FET follower is not in use.

None of my through hole FET follower have transient voltage protection, and none have been "killed" by transients to the best of my knowledge (although I have "killed" a few of the FET's, believed to be by careless handling). But as has been said, an ounce of prevention is worth a pound of cure. So I would recommend "opposed" 1N4148 diodes across the FET follower input, as well as "opposed 1N4148 diodes in parallel with a 47K ohm resistor from the ground plane of the FET follower to earth ground if there is any chance that transient voltages could "kill" your FET follower (frequent thunderstorms, blowing snow, and periods of cold with very low humidity are common "killers"). I am going to do this myself when I get around to it.

Even if I had a permanent active array, I doubt that I would use remote DC power. That is asking for trouble because it is so difficult to prevent noise ingress. I use 3x 6 volt lantern batteries because they are cheap and I don't listen a lot. One of the FET followers draws only 10 mA, and the LDO regulator adds to the draw, but not a lot. So batteries last me a long time. If I had a permanent installation, I would buy rechargeable batteries.

I used gold plated Nakamichi banana plugs for all my connectors to the FET follower box and buy the 0534A model here. I believe these are shipped directly from China. I have ordered Nakamichi banana plugs several times, and have always been satisfied with my purchases. The Nakamichi banana plugs I use are "unbranded." You can also buy "branded" Nakamichi banana plugs. The unbranded have larger slotted screws for affixing the speaker wire (I tin the wire), while the branded plugs have smaller Phillips screws for affixing the speaker wire.

GASP!!! (1/1/2012) One of my branded Nakamichi banana plugs "sprang a leak" this afternoon. The pronged banana tip pulled out of the body. It is press fit into the body. A "no no." I am going to have to try to pull one of the unbranded Nakamichi banana plugs apart, and if it comes apart, it also will get a thumbs down, and I will have to start searching for

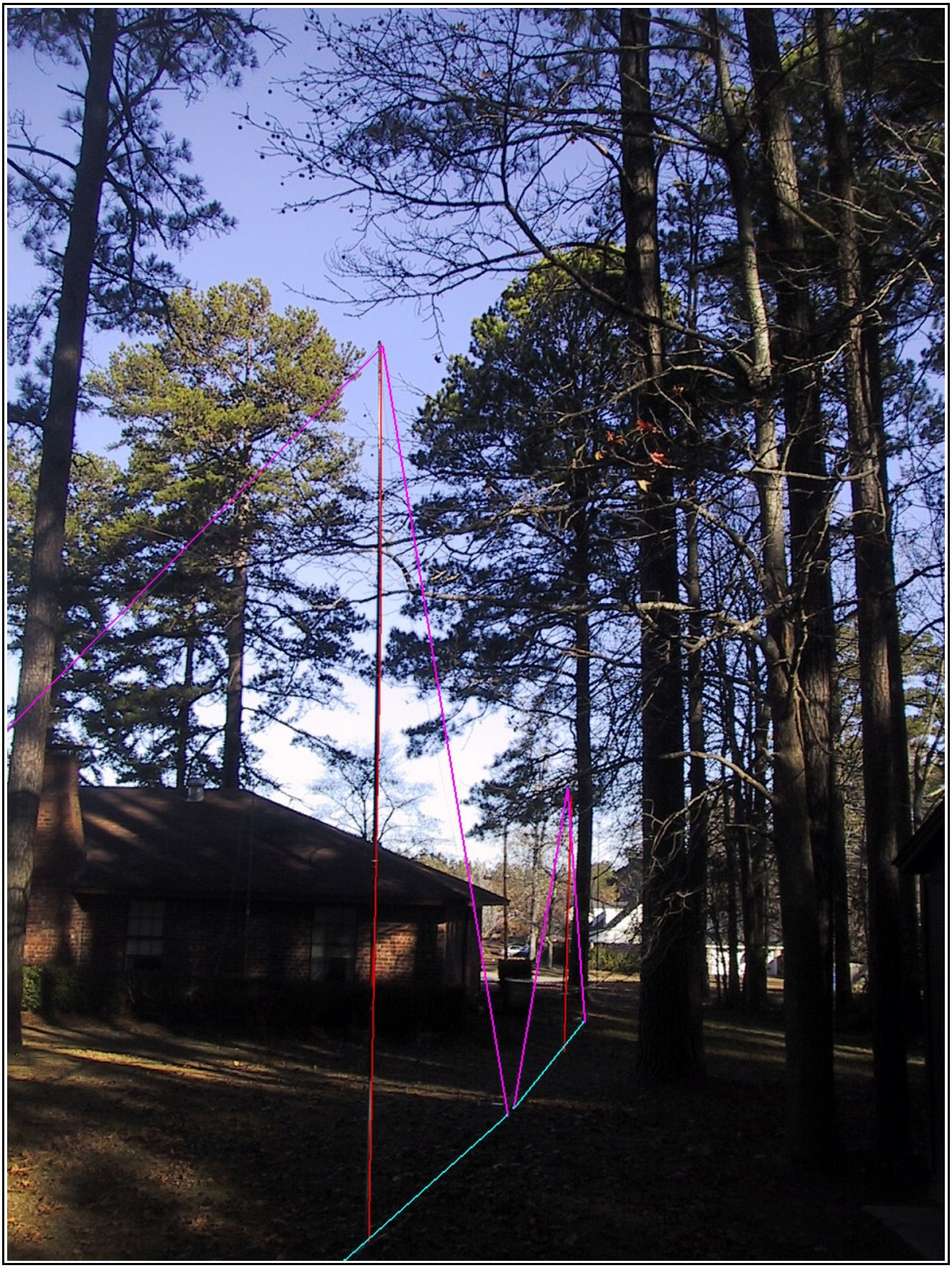

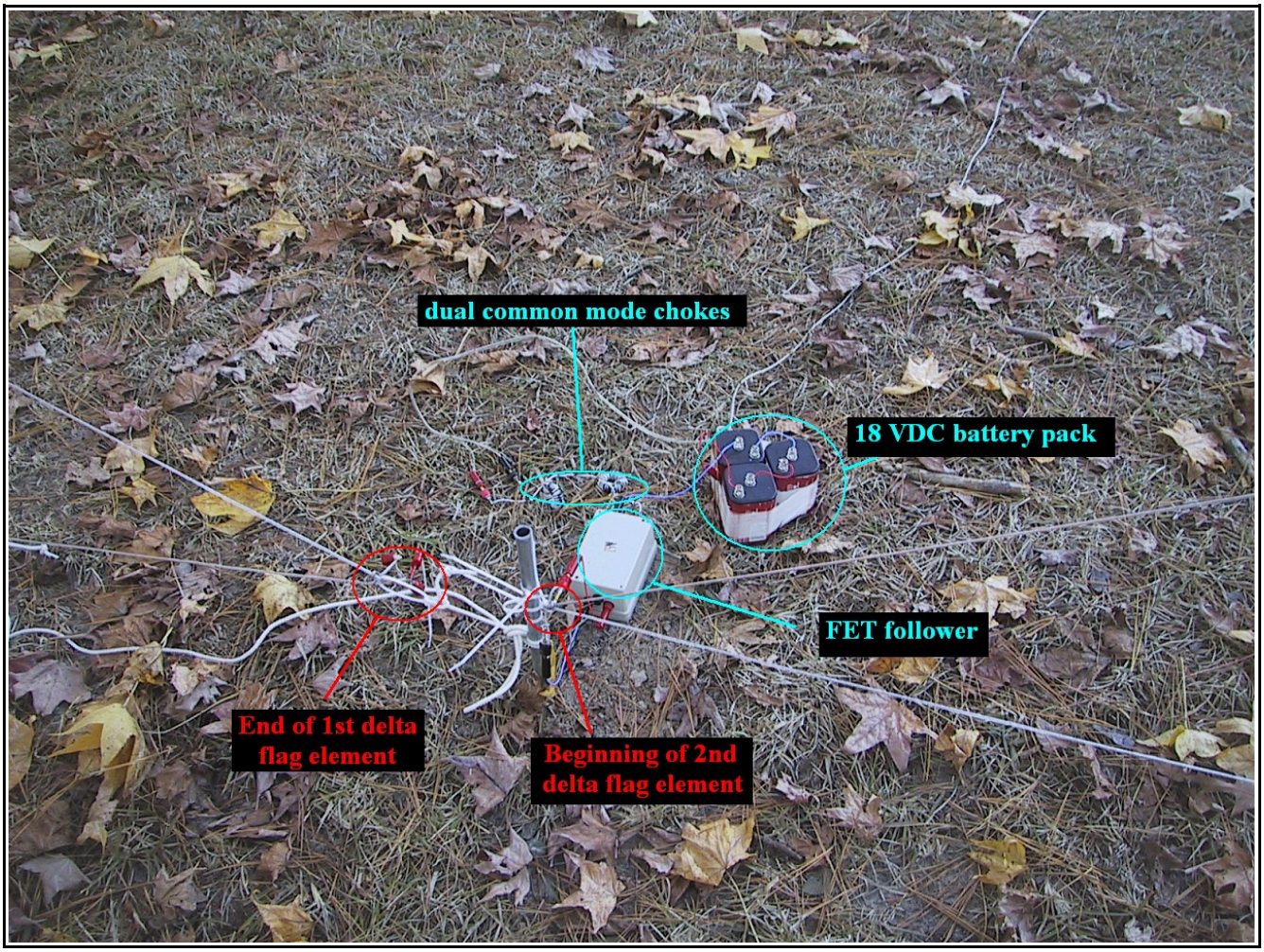

better banana plugs.

I use Pomona gold plated banana jacks. They are not cheap, but they are as good as it gets, and once installed properly, seem to last forever. I buy them from Mouser (565-2854-0 black, and 565-2854-2 red), about $2.50 each. The plastic of these Pomona banana jacks is brittle, so I used faucet washers (with holes which I enlarged using a heavy duty 0.25 inch paper punch) as strain relief to prevent the plastic from cracking. And I made water tight seals using O-rings of appropriate size purchased at Lowes.

I found fancy watertight aluminum Hammond boxes on eBay for about 10 cents on the dollar. Standard Hammond water tight extruded aluminum boxes would be satisfactory. Plastic watertight boxes might might work fine... I do not know... but the metal boxes may help prevent the FET followers from picking up undesired signals or noises... although I suspect that the phaser-combiners are mainly responsible for suppressing the undesired FET follower pickup.

It is now 10 pm on 12/31/2011 and I have been listening to the new half size dual active delta flag array off and on for about 7 hours. Even during sunset transition the nulls were great. As I said above, this dual array is by far and away the best half size array, dual or quad, that I have developed yet in this marathon of new antenna array development. Most of the time tonight virtually all of my big hitters to the North of me (the direction of the null) have been totally and completely absent (perhaps one or two exceptions... I have not sat on the possible exceptions to determine their locations). There has rarely been any English heard from one end of the MW band to the other. It is as if I have been teleported to somewhere between Cuba, Mexico, and Central America.

Two photos above show some of the details of the half size dual active delta flag array. The first photo (on the previous page) of the half size dual delta flag array in my side yard contains outlines the delta antenna elements with colored lines to make them easier to see. If you magnify the first photo you can almost see the battery pack and FET follower on the ground near the junction of the two delta flag elements. The second photo immediately shows the close proximity of the two delta

antenna elements, the FET follower, the battery pack, and the dual common mode chokes. Magnify the photo immediately above (by, say, 400) to get a better view of the dual common mode chokes in the twin lead line.

Parts For Builders

Steward toroids are sold by DigiKey. The on line DigiKey catalog page with the Steward part numbers is here. After writing down the catalog number, go to www.digikey.com and do a search of their web site on the catalog number. The AL values of the different size Steward toroids are listed there. The half inch Steward AL value is about 3600. You can use other brands of toroids from other suppliers provided their AL values are similar. For European builders, Ferroxcube TN13/7,5/5-3E25 toroids are a close match for the half inch Steward toroid with an AL of about 2800 and can be purchased from ELFA here (click on the Toroidal Cores box). The TN25/15/10-3E25 is a suitable substitute for the Steward 35T1000-00H, and the TN36/23/15-3E25 is a suitable substitute for the Steward 35T1416-00H. The small toroid can also be purchased from Farnell here (but they don't make it easy, you will have to do a search of their site with key words, like ferroxcube and toroid). The through hole J310 and J271 FET's may be purchased from Mouser (www.mouser.com). Both DigiKey and Mouser accept small orders7

Deactivation Tests

I removed the active heads the afternoon of 1/1/2012 and reconfigured the half size dual delta flag array with step down transformers as a passive array to see if it would "fly." The prognosis was not good. My big hitters to the North started "bleeding through" before sunset and continued bleeding through after sunset. I continued the test throughout the evening, but was not satisfied with the test because the lead ins were 150' of speaker wire, longer than necessary, with more "lead in pick up" than would be the case for shorter lengths, and were not shielded twinax, the best lead in for minimizing signal and noise contamination. 1/2/2012::: I bought a cheap desk kit at WalMart, assembled it, reconfigured one of the rooms of my house as an alternate location for making measurements, and set up a new test using 100' lengths of shielded twinax for the half size dual passive delta flag array. I could have moved the half size dual delta flag elements so that 100' lengths of lead in would reach my measuring receiver, but the move would have placed the antenna elements closer to the power lines at the street in front of my house, which would have raised the man made noise floor. I also did something I should have done before, namely terminated the twin lead with 100 ohm resistors and measured the signal pick up. Some signals were attenuated no more than 20 db, which indicted that signal contamination was almost certainly degrading the null. Then it dawned on me that the dual common mode chokes had been placed at the antenna elements to suppress low MM band pick up by the FET followers. The usual place for such common mode chokes is at the received end of the led in, or perhaps one each at the receiver end and one each at the middle of the lead in. So I moved the dual common mode chokes to the receiver end of the twin lead, just before the phaser-combiner, and was gratified when all signals were attenuated by 55 dB or more with the new placement of the CMC's. I also added a coaxial common mode coax choke to the output of the phaser combiner, before the first Norton preamp; see the photo at right. That attenuated signal pick up by the led in another 6 dB or so.

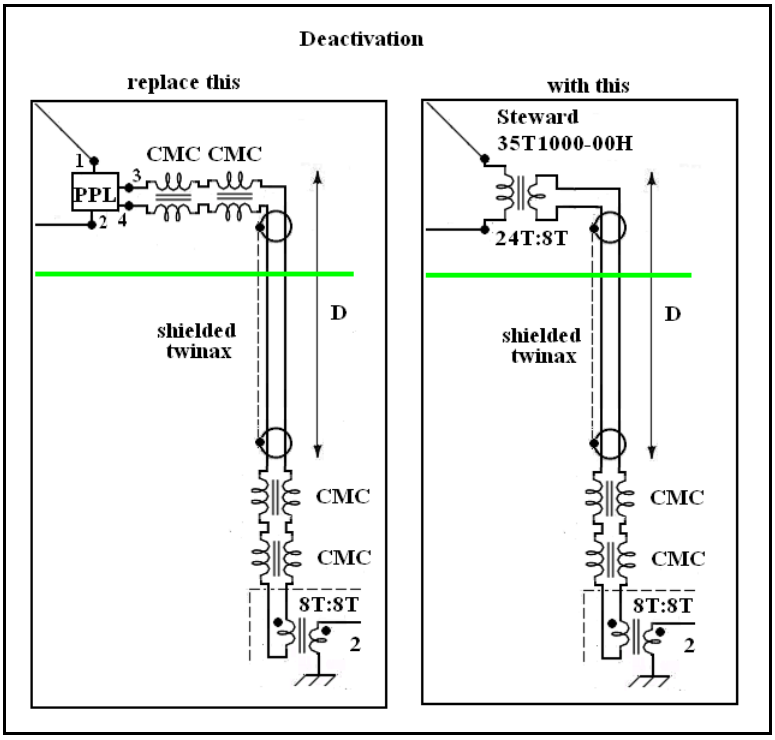

Thus the signal contamination problem has been solved, and the step down

transformer variant of the half size 50' spaced dual delta flag array has now been established to be viable, provided shielded twinax is used for lead in, and provided amplifier noise is not an issue. At most, if not all, urban and semi-urban locations, like mine here in North Louisiana, man made noise should be high enough so that it will be the limiting noise. But in case you have misunderstood this discussion, let me add that if shielded twinax in not used, then the active approach should be used. In any case, 50 ohm coax should not be used for lead in with either the active or deactivated half size close spaced dual delta flag array.

While testing the deactivated half size dual delta flag array, I discovered the active half size delta flag array lead in pick up was reduced by adding dual common mode chokes at the input to the phaser combiner. The only surprise here was why I did not already do this. This change is included in the diagrams and schematics above.

If you think you can implement the half size dual delta flag array without using common mode chokes, think again. Take a look below at the high RDF phased flag array developed in 2003 by the leading authority on high performance low signal output receiving antennas for the 160 meter band, Doug Waller, NX4D. How many common mode chokes did he use for his original dual phased flag array? Three. I always used one common mode choke on my dual and quad delta flag arrays which were optimized for medium wave splatter reduction (and thus their signal outputs were not reduced as much as the

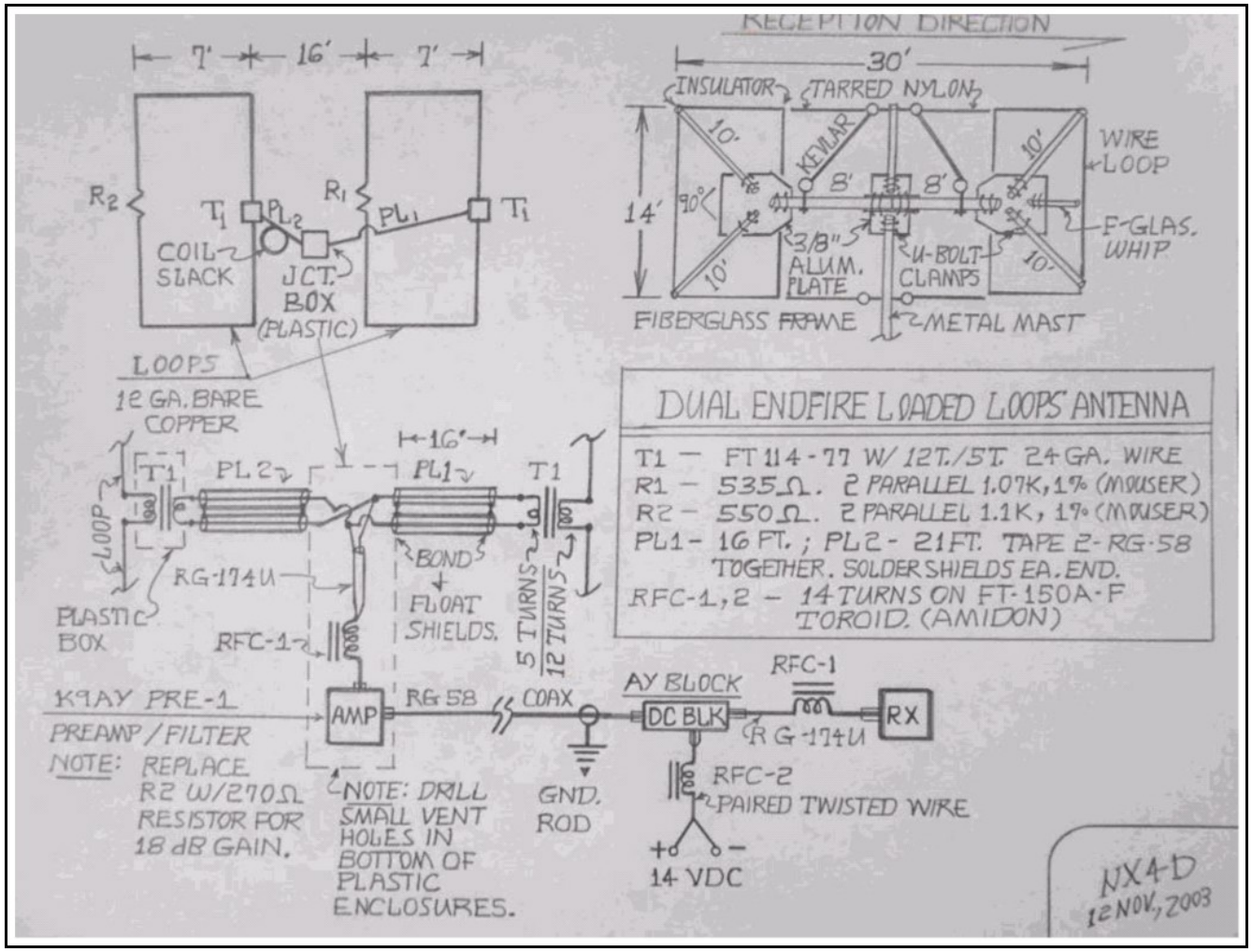

NX4D array) which I developed in late 2008 and early 2009. Looking back (hind sight is always 20-20), my dual and quad delta flag arrays would probably have performed somewhat better if I had used a few more common mode chokes with them. In any case, I was well aware of the importance of common mode chokes because I had paid attention to NX4D.

If you purchased a FLG100 thinking you had bought the “fixings” for an active flag or delta flag antenna, or if you purchased two FLG100's thinking you had bought the fixings for a dual active flag array or dual active delta flag array, you are sadly mistaken. The FLG100 is an ordinary 50 ohm input 50 ohm output amplifier with a 850 ohm to 50 ohm

broadband step down transformer connected to the input of the amplifier, both of them sealed inside a box with potting material, with DC power coming from near your radio down the coax to the FLG100 amplifier at your antenna, and the desired signal going the other way from your antenna to your receiver. The DC supply also sends noise down the coax which is picked up by your antenna and sent back along the coax to your receiver. You may not hear that noise, but only because ambient man made noise at your location is greater than that noise. If you took your antenna and receiver to a low noise location, you would almost certainly hear the noise introduced by the FLG100 power supply.

The FLG100 approach is obviously not a good approach. You are better off winding your own step down transformer (with no amplifier out at your antenna), and buying or building a Norton transformer feedback amplifier or two to use at your receiver. It will deliver exactly the same or more signal to your receiver and will not introduce undesirable noise. You also should not use coax like the FLG100 uses, but instead use speaker wire (or zip cord, or high class shielded twinax) which picks up much less extraneous signal and noise than coax. Now don't tell me that you live in Europe and can't find speaker wire. It took me a only few moments with Google to find this (scroll down), and I am sure there must be many more. I use #18 stranded speaker wire because it is about 100 ohms (nominal) impedance. If you choose twinax (the preferred lead in), be sure to use 100 ohm twinax (it is available in other impedances).

An insensitive receiver like Perseus will need at least two Norton transformer feedback amplifiers. Don't try to save money by building or buying one of the higher noise figure higher gain (20 dB nominal) preamps. Their higher noise figures will mask some of the weak DX you want to hear unless the ambient man made noise at your location is high. In that case, you should try a different hobby or move to a lower noise location. There are no shortcuts to a good MW DX antenna array.

The evening of 1/3/2011 I tested the deactivated (passive) half size dual delta flag array again, after changing to 100' lengths of shielded twinax and adding a sufficient number of common mode chokes. Some bleed through of my big hitters to the North of my location was observed during sunset transition (which is to be expected), but after that nulls have been excellent and stable with only occasional weak appearances of the big hitters to the North. For the average urban and semi-urban location the deactivated version should be entirely satisfactory. In any case, it is by far and away ahead of whatever is in second place for limited space urban and semi-urban MW DXers.